No.	Name	Q'ty	Material	Remarks & Thickness	Finish
1	Housing	1	PBT G.F.		Black
2	Contact	7	Phos. Bronze T=0.2	Gold:1~3u",Ni:40~60u", Tin:120u"	Gold/Tin Plated
3	Shield	1	Brass T=0.3	Tin:120~200u"	Tin Plated
4	Bottom Cover	1	PBT G.F.		Black
5	Spring Shield	1	Stainless T=0.2		

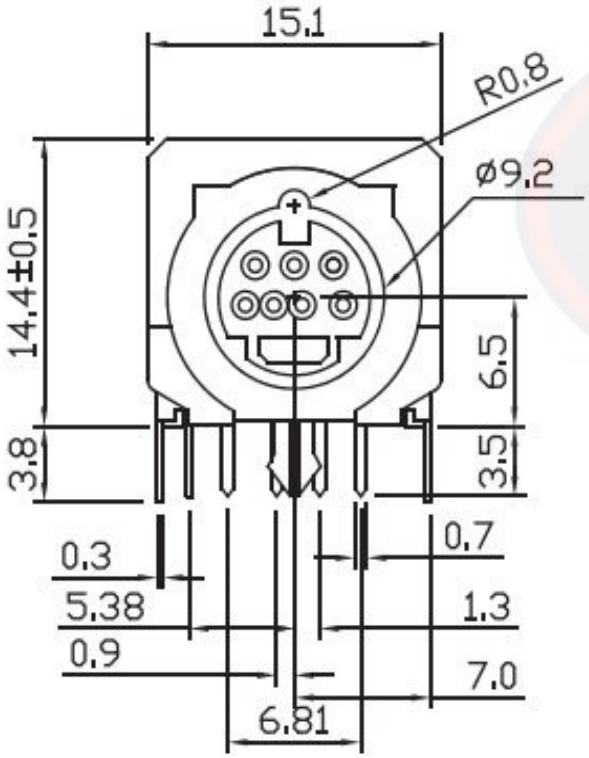

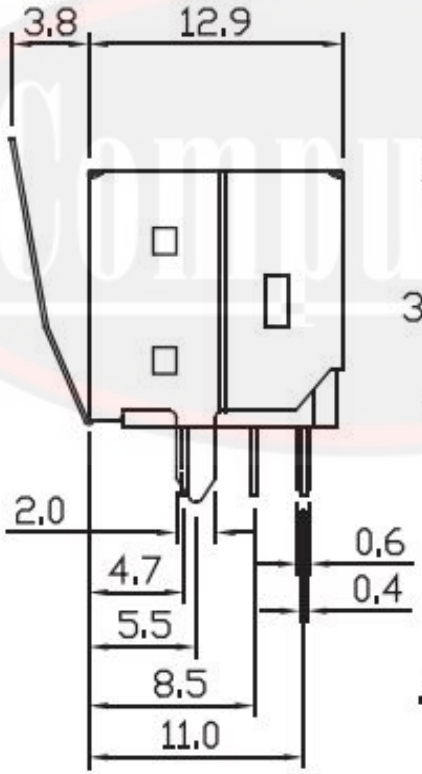

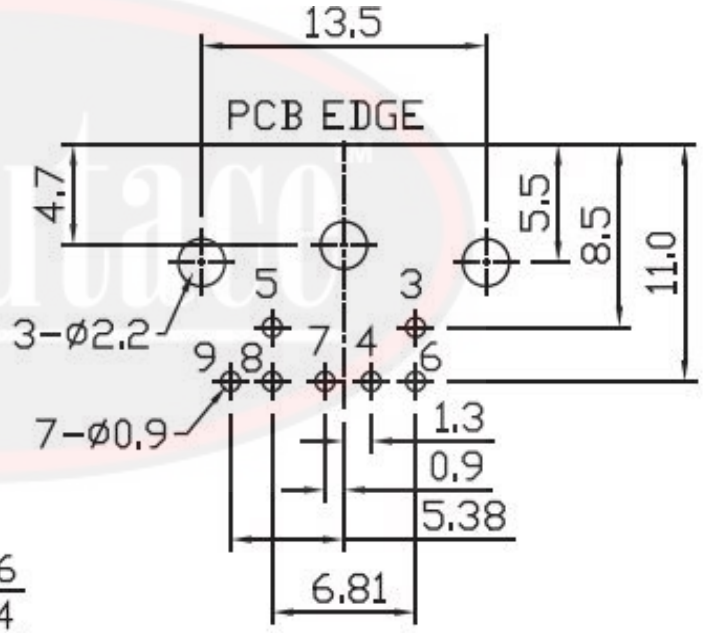

P.C.B. RECOMMEND LAYOUT
BOTTOM VIEW

Computace Electronic Company Limited
info@computace.com
www.computace.com

GENERAL TOLERANCE
X.X ± 0.25
X.XX ± 0.15
X.XXX ± 0.05
ANGLE TOLERANCE ± 1°
RADIUS ± 0.25
HOLE ± 0.13

DRAWN: Luis Wong	DATE: 11/12/2018	UNIT: mm	PART NUMBER : 517-5-1538
CHECKED: Kelvin Lau	DATE: 12/12/2018	SIZE: A4	PRODUCT TITLE: Mini Din Jack Shielded With Grounding – 7Pin
APPROVED: Jade Xu	DATE: 14/12/2018	SCALE: 4/1	DRAWING NUMBER